Product Specifications for E22035-18

Job Name:	Job Type:
Quantity:	Comments

E22035-18
Blocs 4-Light Pendant

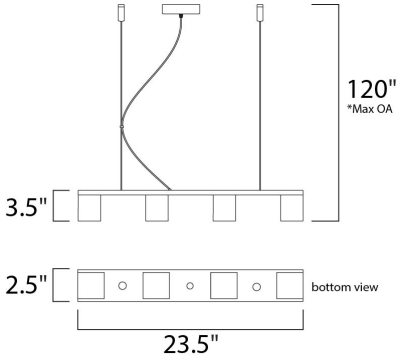

Finish
Polished Chrome

Glass/Shade
Clear/Frosted

Product Category
Linear Pendant

Lamping

Number of Bulb(s)	4
Light Type	Xenon
Bulb Type	G9 Frost
Max Bulb Wattage	40
Max Fixture Wattage	160
Rated Life	±2,000 Hours
Rated Lumens	±2,000
Color Temp	±2,900 K
Bulb(s) Included	Yes
Light Up/Down	N/A
Beam Spread	N/A
CRI	N/A
Photo Cell Included	N/A
Ballast/Driver/Transformer	No
Dimmable	Standard

Measurements

Width	2.50"
Height	3.50"
Length	23.50"
Extension	N/A
Back Plate Width	N/A
Back Plate Height	N/A
HCO	N/A
Min Overall Height	24.00"
Max Overall Height	120.00"
Hanging Weight	6.75 lb(s)
Height Adjustable	N/A
Slope	120°
Chain Length	N/A
Wire Length	120.00"
Canopy Width	N/A
Canopy Height	N/A
Canopy Length	N/A

Shipping

Carton Weight	8.00 lb(s)
Carton Width	6.50"
Carton Height	6.00"
Carton Length	26.50"
Carton Cubic Feet	N/A
Master Pack	1
Master Pack Weight	N/A
Master Pack Width	N/A
Master Pack Height	N/A
Master Pack Length	N/A
Master Cubic Feet	N/A
UPS Shippable	Yes

Certification

Safety Rating	Dry
Energy Star	No
CA Title 24	No
CA Title 20	No
ADA	No

Other

UPC Code	845094002666
Material	N/A

Equivalents

Incandescent Watts	N/A
Fluorescent Watts	N/A

ET2 Contemporary Lighting and all designs, logos and images © 2015 ET2 Contemporary Lighting. All Rights Reserved. ET2 Contemporary Lighting reserves the right, at any time, to make changes in the design and/or construction of the product including the discontinuation of product without prior notice. Color may vary from what is pictured above due to limitations inherent to photographic processes. Always consult a qualified, licensed electrician before installation of any product weighing 35 pounds or more. We recommend that a qualified, licensed electrician do the installation. Always install to a mechanically sound structure.