Sense | E21206-10PC

Job Name:_____ Job Type:_____ Quantity:_____ Comments:_____







PRODUCT DESCRIPTION

Bring a touch of contemporary style to any design space with the Sense Collection. The external mirrored glass enveloping a sphere of xenon emanates the heart and soul of the space it inhabits. With an added touch of elegance, the clean simple orb frame falls graciously from the ceiling on a gently swirling lifeline.

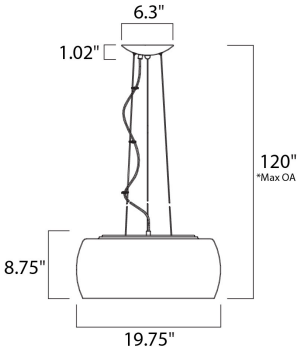

*max overall height

MEASUREMENTS

DIMENSION	: 19.75" W x 8.75" H
MAX OAH	: 120" OAH
CANOPY	: 6.3" W x 1.02" H x 6.3" L
HANGING WEIGHT	: 16.76 lb

LAMPING

INPUT VOLTAGE	: 120V
LUMENS	: 3,000 Rated
BULB	: 6 x 3W LED G9 , 18W Total
BULB INCLUDED	: (Included)
DIMMABLE	: Y
COLOR_TEMP	: 2900K

FINISHES OPTION

Polished Chrome (PC)

GLASS

Mirror Chrome 81

MATERIAL

Steel

RATINGS

cETLus
Dry Location

ADDITIONAL

RATED LIFE 2000 Hours
OPERATING TEMPERATURE:
-20°C (-4°F), 40°C (104°F)

Always consult a qualified electrician before installing any lighting product.

ET2 Contemporary Lighting™

WESTERN DISTRIBUTION CENTER (HEADQUARTER)
253 NORTH VINELAND AVE I CITY OF INDUSTRY, CA 91746

EASTERN DISTRIBUTION CENTER
101 GARDNER PARK | PEACHTREE CITY, GA 30269

P. 626.956.4200 I F. 626.956.4225 I maximlighting.com