Contempra | E22121-24AL

Job Name:_____ Job Type:_____ Quantity:_____ Comments:_____

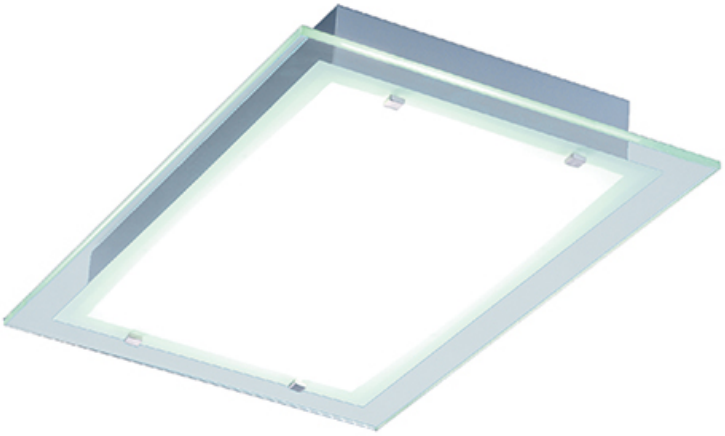

PRODUCT DESCRIPTION

The Contempra collection features thick Clear/White glass plates with polished edges accented by a Brushed Aluminum finish. The simplistic design combined with a fluorescent light source, assures energy saving operation and a contemporary touch to any kitchen island or well-designed workspace.

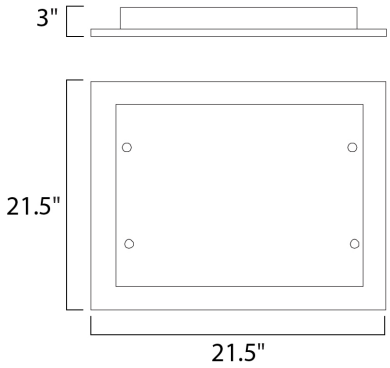

MEASUREMENTS

DIMENSION	: 13.75" L x 21.5" W x 3" H
HANGING WEIGHT	: 13.23 lb

LAMPING

INPUT VOLTAGE	: V
LUMENS	: 5,800 Rated
BULB	: 2 x 36W Fluorescent 4 Pin 2G11 , 72W Total
BULB INCLUDED	: (Included)
DIMMABLE	: No
COLOR_TEMP	: 3000K

FINISHES OPTION

Brushed Aluminum (AL)

GLASS

Clear 24

MATERIAL

Glass, Steel

RATINGS

cETLus
Location

ADDITIONAL

INCANDESCENT WATTS: 527
RATED LIFE 10000 Hours
OPERATING TEMPERATURE:
-20°C (-4°F), 40°C (104°F)

Always consult a qualified electrician before installing any lighting product.

Contemporary Lighting™

WESTERN DISTRIBUTION CENTER (HEADQUARTER)
253 NORTH VINELAND AVE I CITY OF INDUSTRY, CA 91746

EASTERN DISTRIBUTION CENTER
101 GARDNER PARK | PEACHTREE CITY, GA 30269

P. 626.956.4200 I F. 626.956.4225 I maximlighting.com