Fizz IV | E22774-91PC

Job Name:_____ Job Type:_____ Quantity:_____ Comments:_____

PRODUCT DESCRIPTION

Introducing the new and improved version of our previous Fizz II. The new version features a ceramic base LED from LG. With 30% greater light output and dimming capability, the new Fizz IV sets the standard in contemporary illumination.

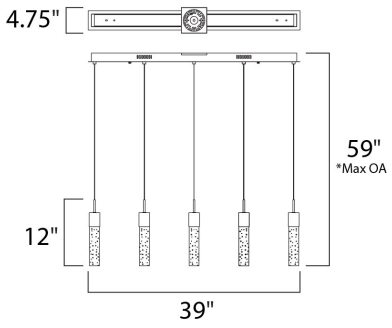

*max overall height

MEASUREMENTS

DIMENSION	: 4.75" L x 39" W x 12" H
MAX OAH	: 134" OAH
CANOPY	: 1.8" W x 1.5" H x 37.8" L
HANGING WEIGHT	: 15.4 lb

LAMPING

INPUT VOLTAGE	: 120V
LUMENS	: 2,625 Rated (1,180 Del.)
BULB	: 5 x 7.5W LED PCB Integrated , 38W Total
BULB INCLUDED	: (Integrated)
DIMMABLE	: Triac CL
COLOR_TEMP	: 3000K

FINISHES OPTION

Polished Chrome (PC)

GLASS

Bubble 91

MATERIAL

Bubble Glass, Steel

RATINGS

cETLus
Dry Location

ADDITIONAL

FLUORESCENT WATTS: 24.6
INCANDESCENT WATTS: 111.82
RATED LIFE 40000 Hours
OPERATING TEMPERATURE:
-20°C (-4°F), 40°C (104°F)

Always consult a qualified electrician before installing any lighting product.

ET2 Contemporary Lighting™

WESTERN DISTRIBUTION CENTER (HEADQUARTER)
253 NORTH VINELAND AVE I CITY OF INDUSTRY, CA 91746

EASTERN DISTRIBUTION CENTER
101 GARDNER PARK | PEACHTREE CITY, GA 30269

P. 626.956.4200 I F. 626.956.4225 I maximlighting.com