Belt | E22954-BK

Job Name:_____ Job Type:_____ Quantity:_____ Comments:_____

PRODUCT DESCRIPTION

An articulating LED linear pendant finished in Matte Black that can extend or shorten according to the length required for various applications. Expand the lighting surface by pulling the panels at opposite ends away from each other. As the light source wraps around the edge of the panels, it casts light both upward and downward along its shape. Perfect for multipurpose areas, above a kitchen island or dining table, it is ideal when measurements fall between sizes or require flexibility, allowing you to precisely customize the pendant's width to the required measurements.

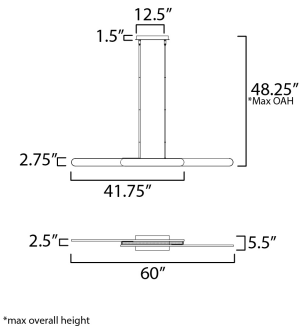

MEASUREMENTS

DIMENSION	: 60" L x 2.5" W x 2.75" H
MAX OAH	: 48.25" OAH
CANOPY	: 5.5" W x 1.5" H x 12.5" L
HANGING WEIGHT	: 9.92 lb

LAMPING

INPUT VOLTAGE	: 120-277V
LUMENS	: 3,200 Rated (2,800 Del.)
BULB	: 2 x 20W LED DC Integrated , 40W Total
BULB INCLUDED	: (Integrated)
DIMMABLE	: Triac or ELV at 120V
CRI	: 90 CRI
COLOR_TEMP	: 3000K

FINISHES OPTION

Black (BK)

MATERIAL

Aluminum, Steel, PVC

RATINGS

cETLus
Dry Location

ADDITIONAL

SLOPE: 15
RATED LIFE 50000 Hours
OPERATING TEMPERATURE:
-20°C (-4°F), 40°C (104°F)

Always consult a qualified electrician before installing any lighting product.

ET2 Contemporary Lighting™

WESTERN DISTRIBUTION CENTER (HEADQUARTER)
253 NORTH VINELAND AVE I CITY OF INDUSTRY, CA 91746

EASTERN DISTRIBUTION CENTER
101 GARDNER PARK | PEACHTREE CITY, GA 30269

P. 626.956.4200 I F. 626.956.4225 I maximlighting.com