Metallika LED | E24296-AL

Job Name:_____ Job Type:_____ Quantity:_____ Comments:_____

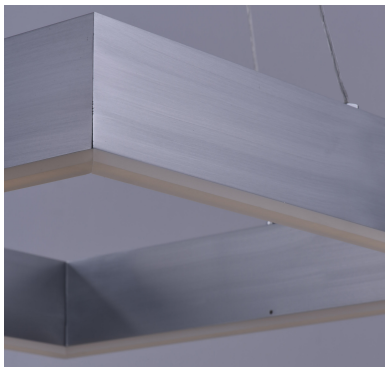

PRODUCT DESCRIPTION

Suspended squares of aluminum finished in three beautiful metallic finishes, Brushed Copper, Coffee, or Brushed Aluminum. Driven by high powered integrated LED modules, these classic shapes fit perfectly into today's interiors.

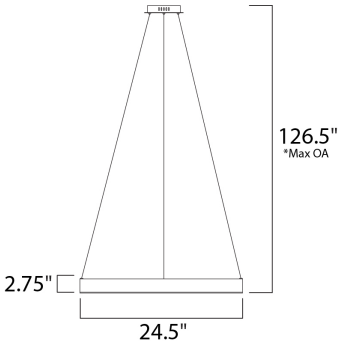

*max overall height

MEASUREMENTS

DIMENSION	: 24.5" L x 24.5" W x 2.75" H
MAX OAH	: 126.5" OAH
CANOPY	: 8.75" W x 1.75" H x 8.75" L
HANGING WEIGHT	: 4.5 lb

LAMPING

INPUT VOLTAGE	: 120V
LUMENS	: 4,500 Rated (2,600 Del.)
BULB	: 1 x 65W LED PCB , 65W Total
BULB INCLUDED	: (Integrated)
DIMMABLE	: Triac CL
CRI	: 80+ CRI
COLOR_TEMP	: 3000K

FINISHES OPTION

Brushed Aluminum (AL)

Coffee (COF)

MATERIAL

Aluminum, Acrylic

RATINGS

cETLus
Dry Location

ADDITIONAL

ADJUSTABLE
OPERATING TEMPERATURE:
-20°C (-4°F), 40°C (104°F)

Always consult a qualified electrician before installing any lighting product.

ET2 Contemporary Lighting™

WESTERN DISTRIBUTION CENTER (HEADQUARTER)
253 NORTH VINELAND AVE I CITY OF INDUSTRY, CA 91746

EASTERN DISTRIBUTION CENTER
101 GARDNER PARK | PEACHTREE CITY, GA 30269

P. 626.956.4200 I F. 626.956.4225 I maximlighting.com