Gyro II | E24787-BKPC

Job Name:_____ Job Type:_____ Quantity:_____ Comments:_____

PRODUCT DESCRIPTION

A very unique and interesting design that features concentric bands of Polished Chrome or Black that rotate on 3 axis points and adjusts in multiple directions similar to a gyro. The edge of each slender band encases a small LED strip covered by a frosted lens. This work of art is so much more than just a lighting fixture.

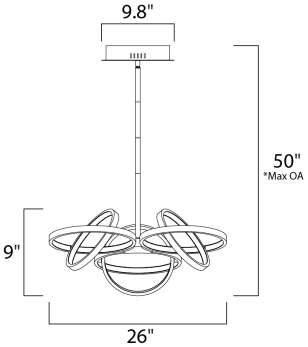

*max overall height

MEASUREMENTS

DIMENSION	: 26" L x 26" W x 9" H
MAX OAH	: 50" OAH
CANOPY	: 9.8" W x 2" H x 9.8" L
HANGING WEIGHT	: 9.02 lb

LAMPING

INPUT VOLTAGE	: 120V
LUMENS	: 5,140 Rated
BULB	: 6 x 73W LED PCB Integrated , 73W Total
BULB INCLUDED	: (Integrated)
DIMMABLE	: Triac CL
CRI	: 80+ CRI
COLOR_TEMP	: 3000K

FINISHES OPTION

Black / Polished Chrome (BKPC)

MATERIAL

Metal, Aluminum, Acrylic

RATINGS

cETLus
Dry Location

ADDITIONAL

ADJUSTABLE
SLOPE: 30
OPERATING TEMPERATURE:
-20°C (-4°F), 40°C (104°F)

Always consult a qualified electrician before installing any lighting product.

ET2 Contemporary Lighting™

WESTERN DISTRIBUTION CENTER (HEADQUARTER)
253 NORTH VINELAND AVE I CITY OF INDUSTRY, CA 91746

EASTERN DISTRIBUTION CENTER
101 GARDNER PARK | PEACHTREE CITY, GA 30269

P. 626.956.4200 I F. 626.956.4225 I maximlighting.com