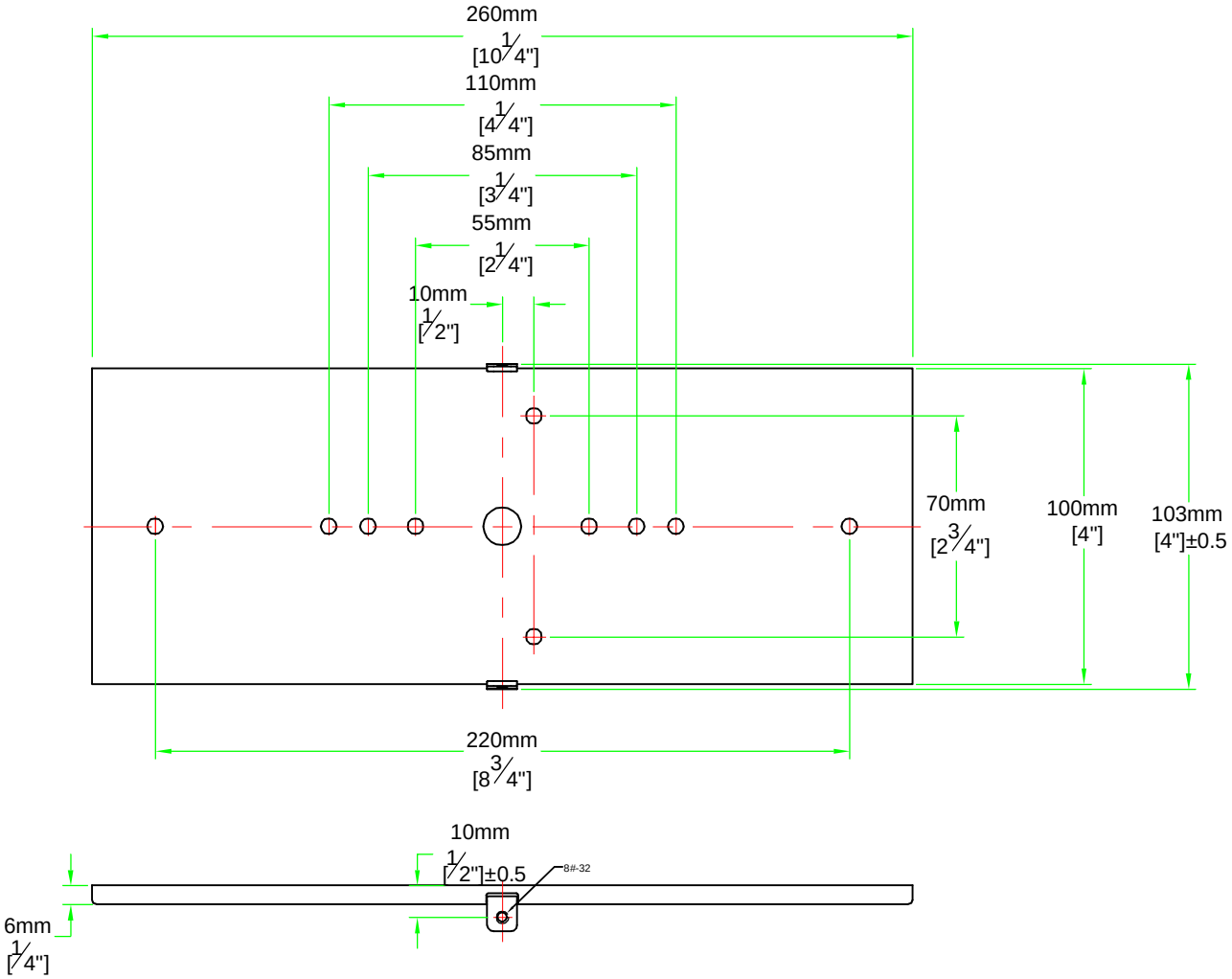
260mm
[10 1/4"]
110mm
[4 1/4"]
85mm
[3 1/4"]
55mm
[2 1/4"]
10mm
[1/2"]
70mm
[2 3/4"]
100mm
[4"]
103mm
[4"]±0.5
220mm
[8 3/4"]
10mm
[1/2"]±0.5
8#-32
6mm
[1/4"]