Quantum LED | E20906-BK

Job Name:_____ Job Type:_____ Quantity:_____ Comments:_____

PRODUCT DESCRIPTION

These Black aluminum pendants are unique in that they are formed as a tapered cylinder open at both the top and bottom. LEDs are mounted on the very top projecting down into a white acrylic diffuser, lining the inside of the pendant. The opening at the top provides up-light, as well as down-light.

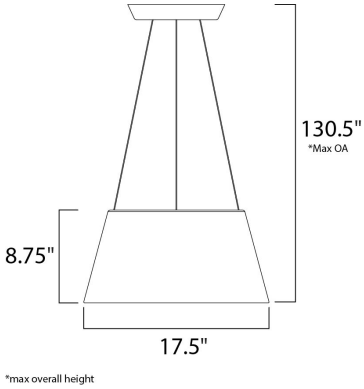

*max overall height

MEASUREMENTS

DIMENSION	: 17.5" L x 17.5" W x 8.75" H
MAX OAH	: 130.5" OAH
HANGING WEIGHT	: 9.46 lb

LAMPING

INPUT VOLTAGE	: 120V
LUMENS	: 3,500 Rated
BULB	: 2 x 30W LED PCB Integrated , 60W Total
BULB INCLUDED	: (Integrated)
DIMMABLE	: Triac CL
CRI	: 80+ CRI
COLOR_TEMP	: 3000K

FINISHES OPTION

Black (BK)

MATERIAL

Aluminum, Acrylic

RATINGS

cETLus
Dry Location

ADDITIONAL

ADJUSTABLE
RATED LIFE 40000 Hours
OPERATING TEMPERATURE:
-20°C (-4°F), 40°C (104°F)

PHOTOMETIC: Report Found Online

Always consult a qualified electrician before installing any lighting product.

ET2 Contemporary Lighting™

WESTERN DISTRIBUTION CENTER (HEADQUARTER)
253 NORTH VINELAND AVE I CITY OF INDUSTRY, CA 91746

EASTERN DISTRIBUTION CENTER
101 GARDNER PARK | PEACHTREE CITY, GA 30269

P. 626.956.4200 I F. 626.956.4225 I maximlighting.com