Flare | E23275-93BKSFTG

Job Name:_____ Job Type:_____ Quantity:_____ Comments:_____

PRODUCT DESCRIPTION

A ring suspends a tube of LED light evenly diffused through opal white acrylic. A striking combination of soft gold and black bring boldness to the collection. By adjusting the rings on the chandeliers, the light element can be positioned horizontally or at an angle. The 3 light multi-pendant suspends three different size rings that can be adjusted to the height you desire.

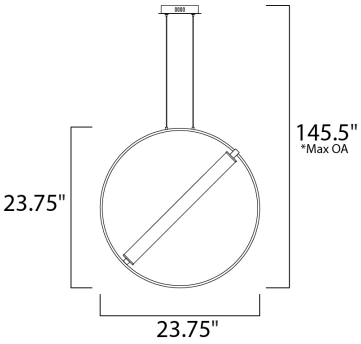

*max overall height

MEASUREMENTS

DIMENSION	: 23.75" L x 6.25" W x 23.75" H
MAX OAH	: 145.5" OAH
CANOPY	: 6.3" W x 1.2" H x 6.3" L
HANGING WEIGHT	: 3.1 lb

LAMPING

INPUT VOLTAGE	: 120V
LUMENS	: 1,411 Rated (1,090 Del.)
BULB	: 1 x 20W LED PCB Integrated , 20W Total
BULB INCLUDED	: (Integrated)
DIMMABLE	: Triac CL
CRI	: 80+ CRI
COLOR_TEMP	: 3000K

FINISHES OPTION

Black / Soft Gold (BKSFTG)

GLASS

Clear and Frosted 93

MATERIAL

Steel, Aluminum, Acrylic

RATINGS

cETLus
Dry Location

ADDITIONAL

ADJUSTABLE
SLOPE: 30
RATED LIFE 30000 Hours
OPERATING TEMPERATURE:
-20°C (-4°F), 40°C (104°F)

Always consult a qualified electrician before installing any lighting product.

ET2 Contemporary Lighting™

WESTERN DISTRIBUTION CENTER (HEADQUARTER)
253 NORTH VINELAND AVE I CITY OF INDUSTRY, CA 91746

EASTERN DISTRIBUTION CENTER
101 GARDNER PARK | PEACHTREE CITY, GA 30269

P. 626.956.4200 I F. 626.956.4225 I maximlighting.com