Palla | E24924-SNBK

Job Name:_____ Job Type:_____ Quantity:_____ Comments:_____







PRODUCT DESCRIPTION

Spherical shaped pendants are constructed unibody design. A dramatic two-tone finish is available in your choice of Black/Satin Brass, Dark Gray/Coffee, or Satin Nickle/Black. The LED light source is concealed to reduce glare while providing ample light below.

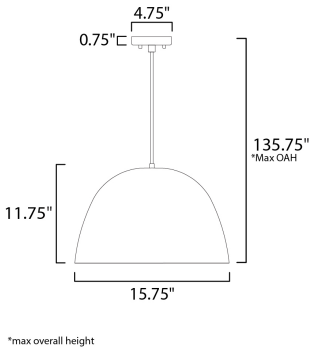

*max overall height

MEASUREMENTS

DIMENSION	: 15.75" L x 15.75" W x 11.75" H
MAX OAH	: 135.75" OAH
CANOPY	: 4.75" W x 0.75" H x 4.75" L
HANGING WEIGHT	: 4 lb

LAMPING

INPUT VOLTAGE	: 120V
LUMENS	: 720 Rated (325 Del.)
BULB	: 1 x 8W LED PCB Integrated , 8W Total
BULB INCLUDED	: (Integrated)
DIMMABLE	: ELV
CRI	: 90 CRI
COLOR_TEMP	: 3000K

FINISHES OPTION

- Dark Gray / Coffee (DGCOF)
- Satin Brass / Coffee (SBRCOF)
- Satin Nickel / Black (SNBK)

MATERIAL

Aluminum + Steel + Acrylic

RATINGS

cETLus
Dry Location

ADDITIONAL

SLOPE: 70
RATED LIFE 35000 Hours
OPERATING TEMPERATURE:
-20°C (-4°F), 40°C (104°F)

Always consult a qualified electrician before installing any lighting product.

ET2 Contemporary Lighting™

WESTERN DISTRIBUTION CENTER (HEADQUARTER)
253 NORTH VINELAND AVE I CITY OF INDUSTRY, CA 91746

EASTERN DISTRIBUTION CENTER
101 GARDNER PARK | PEACHTREE CITY, GA 30269

P. 626.956.4200 I F. 626.956.4225 I maximlighting.com