Alumilux Prime | E41307-SA

Job Name:_____ Job Type:_____ Quantity:_____ Comments:_____

PRODUCT DESCRIPTION

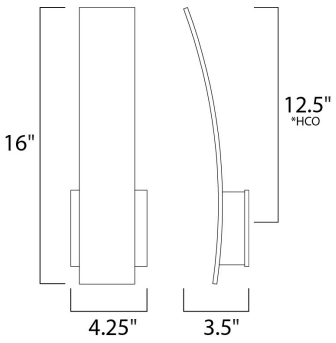

*height from center of outlet to the top of the fixture

MEASUREMENTS

DIMENSION	: 4.25" W x 15.75" H x 3.5" Ext
MAX OAH	: 4.33" W x 4.33" H
HANGING WEIGHT	: 2.79 lb

LAMPING

INPUT VOLTAGE	: 120V
LUMENS	: 430 Rated (300 Del.)
BULB	: 1 x 5W LED PCB Integrated , 5W Total
BULB INCLUDED	: (Integrated)
DIMMABLE	: Triac
CRI	: 90 CRI
COLOR_TEMP	: 3000K
LIGHTING_DIRECTION	: Indirect

FINISHES OPTION

Black (BK)
Satin Aluminum (SA)
White (WT)

MATERIAL

Aluminum

RATINGS

cETLus
Wet Location
ADA

ADDITIONAL

INSTALL UP/DOWN: Up
RATED LIFE 50000 Hours
OPERATING TEMPERATURE:
-20°C (-4°F), 40°C (104°F)

PHOTOMETIC: Report Found Online

Always consult a qualified electrician before installing any lighting product.

Contemporary Lighting™

WESTERN DISTRIBUTION CENTER (HEADQUARTER)
253 NORTH VINELAND AVE I CITY OF INDUSTRY, CA 91746

EASTERN DISTRIBUTION CENTER
101 GARDNER PARK | PEACHTREE CITY, GA 30269

P. 626.956.4200 I F. 626.956.4225 I maximlighting.com