Inca | e21308-10pc/bul

Job Name:_____ Job Type:_____ Quantity:_____ Comments:_____



PRODUCT DESCRIPTION

Legendary meets contemporary with the Inca Collection. Reminiscent of the mythical tales of Incan treasures, the fixtures offer brilliantly shining crystal enclosed within a precision laser-cut sheath that cannot be duplicated. The glow of the light from within casts a beautifully radiant shine that adorns the outer permeable layer.

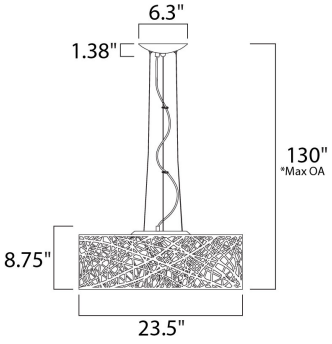

*max overall height

MEASUREMENTS

DIMENSION	: 23.5" L x 23.5" W x 10" H
MAX OAH	: 125" OAH
CANOPY	: 6.3" W x 1.25" H x 6.3" L
HANGING WEIGHT	: 13.64 lb

LAMPING

INPUT VOLTAGE	: 120V
LUMENS	: 4,050 Rated (3,600 Del.)
BULB	: 9 x 4W LED G9 , 36W Total
BULB INCLUDED	: (Included)
DIMMABLE	: Y
CRI	: 80+ CRI
COLOR_TEMP	: 3000K

FINISHES OPTION

Bronze (BZ)

Polished Chrome (PC)

GLASS

Clear and White 10

MATERIAL

Stainless Steel, Steel

RATINGS

cETLus
Dry Location

ADDITIONAL

OPERATING TEMPERATURE:
-20°C (-4°F), 40°C (104°F)

Always consult a qualified electrician before installing any lighting product.

ET2 Contemporary Lighting™

WESTERN DISTRIBUTION CENTER (HEADQUARTER)
253 NORTH VINELAND AVE I CITY OF INDUSTRY, CA 91746

EASTERN DISTRIBUTION CENTER
101 GARDNER PARK | PEACHTREE CITY, GA 30269

P. 626.956.4200 I F. 626.956.4225 I maximlighting.com